BWR5045

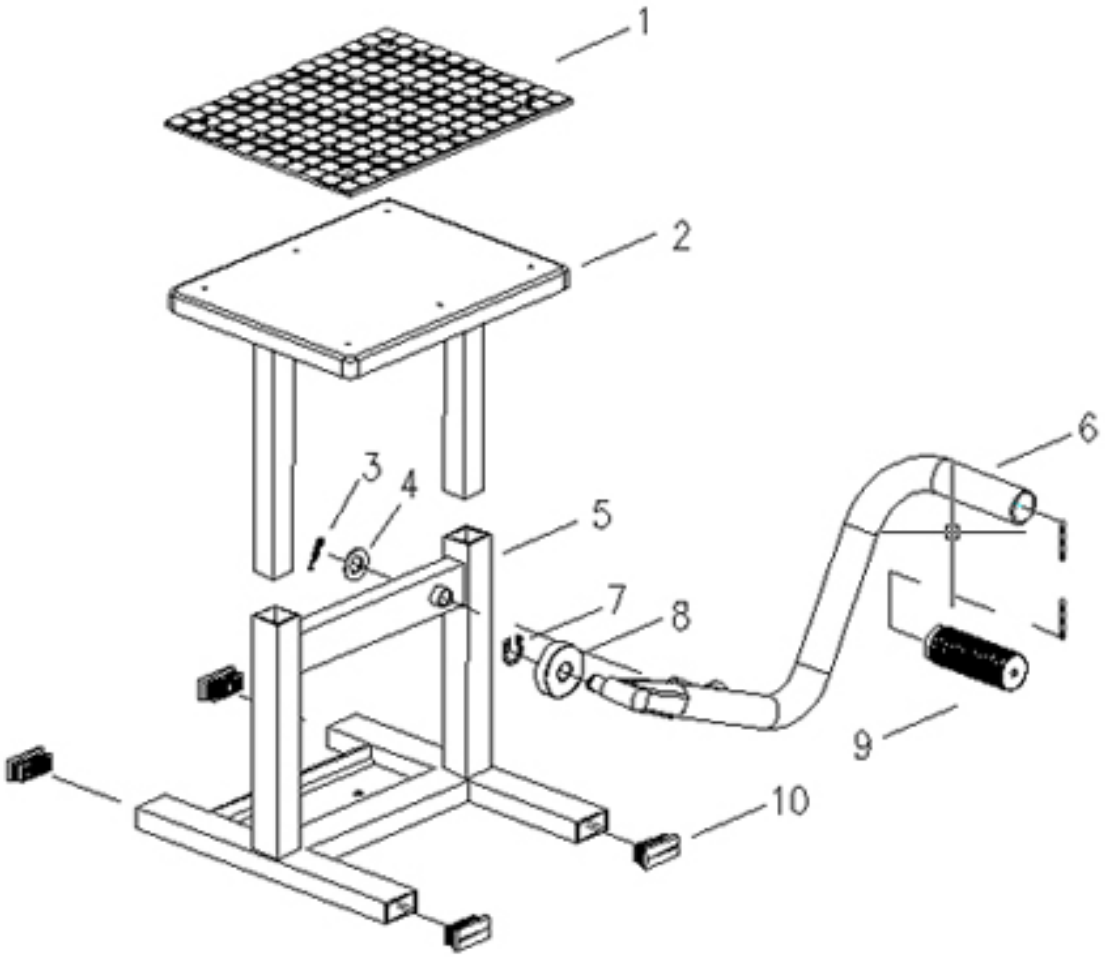

Part No.	DESCRIPTION	QTY
1	RUBBER PLATE	1
2	SUPPORT	1
3	R-PIN	1
4	WASHER	1
5	BASE	1
6	HANDLE	1
7	CHECK RING	1
8	WHEEL	1
9	CIRSLE CAP	1
10	RECTANGULAR CAP	4